Engine Lubrication System

General Description

Engine Lubrication Description

AENS0M0A1501001 (03(01)

The oil pump is of a parachoid type, installed in the timing chain cover and is driven by the crankshaft.
Oil is drawn up through the oil pump strainer and passes through the pump to the oil filter. The filtered oil flows into the main oil gallery in the cylinder block. Oil from the main gallery is supplied to the crankshaft main bearings and cylinder head. An oil passage is connected to the sub gallery via backside of a crankshaft main bearing. The following devices are lubricated or pressurized by delivered oil as follows.

- Crankshaft journal
  Main bearings supporting crankshaft journals are lubricated and the oil is supplied to the connecting rod bearings by means of intersecting passages drilled in the crankshaft, and then splashed from the big end of each connecting rod to lubricate cylinder wall, piston pin, piston and piston rings.
- Timing chain oil jet
  Oil from an oil passage between the main gallery and main bearing is supplied to the jet and injected for lubrication of the timing chain, timing sprockets, timing chain tensioner and timing chain guide.
- Piston cooling jet
  Oil from the sub gallery is injected through the jet to each piston for additional piston cooling.
- Tensioner adjuster
  Oil from an oil passage connected to the main bearing provides pressure to the tensioner adjuster for adjustment of the chain tension.
- Cylinder head
  Oil from the main gallery is supplied to OCVs through the timing chain cover and the rest of oil goes up to camshaft front lower housing and then divided into passages drilled in the cylinder head at intake side and exhaust side independently.
  - Intake and exhaust VVT actuators
    Oil is supplied through the timing chain cover, each OCV, cylinder head, camshaft front lower housing, camshaft front upper housing and each camshaft for the camshaft timing control.
  - Camshaft journal
    Oil is supplied through the passages in the cylinder head at intake side and exhaust side except No.1. No.1 journals are lubricated by oil from each OCV through passages in camshaft front lower housing and camshaft front upper housing.
  - Hydraulic lash adjuster
    Through the same passages for the camshaft journals, oil is supplied. From top of each hydraulic lash adjuster, oil is injected to the valve rocker arm according to the stroke.
  - Valve rocker arm and cam surface
    Splashed oil from top of the hydraulic lash adjuster through the valve rocker arm lubricates the valve rocker arm including its roller bearing and corresponding cam surface.
    The oil pump is equipped with an oil relief valve. This valve relieves oil pressure when the pressure exceeds specified value.
    The oil filter provides a relief valve to bypass oil when oil pressure exceeds the filter's specification caused by clogging of the filter element due to poor maintenance (without changing the filter as scheduled). In this situation, dusty oil will circulate in the engine without filtration and causes the engine damage.
    Cylinder block is provided with an oil temperature sensor for idle speed control. For the idle speed control and sensor inspection, refer to "Oil Temperature Sensor On-Vehicle Inspection" in Section 1C or "Oil Temperature Sensor Inspection" in Section 1C.

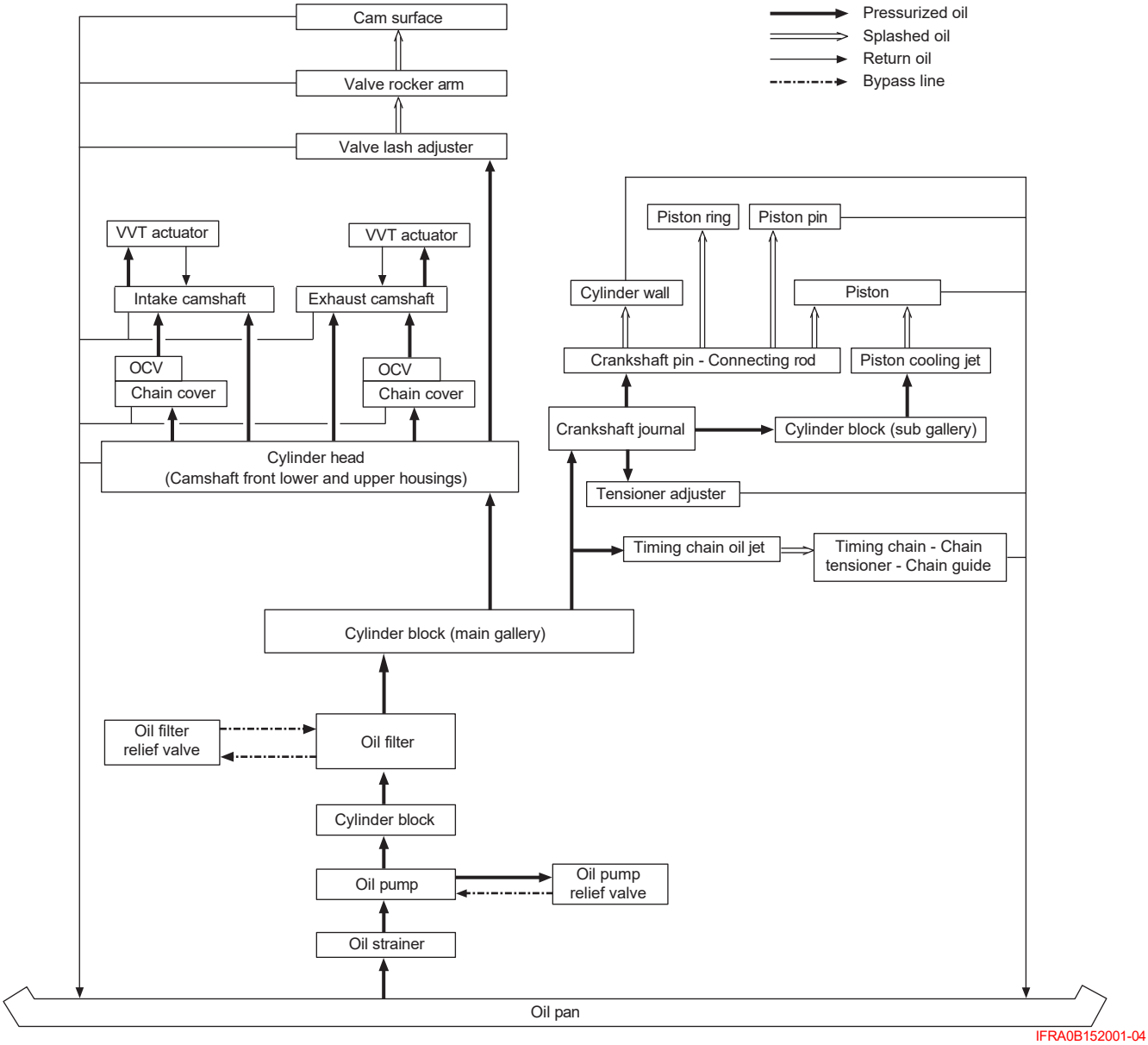

IFRA0B152001-04

Diagnostic Information and Procedures

Oil Pressure Check

AENS0M0A1504001 (06(01)

1) Before checking oil pressure, check the following points.
   - Oil level in oil pan
     If oil level is low, add oil up to FULL level mark (hole) on oil level gauge. (Engine Oil and Filter Change)
   - Oil quality
     If oil is discolored or deteriorated, change it. (Engine Oil and Filter Change)
   - Oil leakage
     If leakage is found, repair leaky point.
2) Place gear shift lever in “Neutral” and apply parking brake.
3) Remove oil pressure switch. (Oil Pressure Switch Removal and Installation)
4) Install special tools to threaded hole where oil pressure switch was removed.

Special tool
(A): 09915M77311
(B): 09915M78211

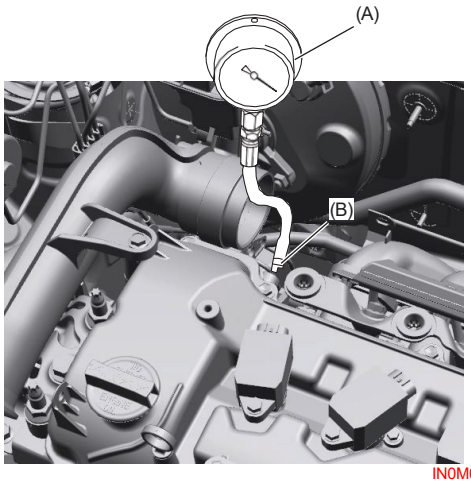

IN0M0A150001-03

5) Start engine and warm it up to normal operating temperature.
6) Measure oil pressure at 4,000 rpm.

Oil pressure specification
300 – 500 kPa (3.1 – 5.1 kgf/cm^2, 43.5 – 72.5 psi) at 4,000 rpm

7) Stop engine.
8) Remove special tools.
9) Install oil pressure switch. (Oil Pressure Switch Removal and Installation)
10) Start engine and check oil pressure switch for oil leakage.
11) Check DTC.
If any DTC is displayed, clear DTC.

Repair Instructions

Engine Oil and Filter Change

AENS0M0A1506001 (08(01)

⚠ CAUTION

There is an increased risk of severe personal injury or health problems if the procedure described below is performed without taking proper precautions.

- **Engine oil has an adverse health effect. Read and understand the instructions in "General Precautions" in Section 00 and follow all the instructions.**
- **Check that the engine is not running when performing Step 1) – 12) of the procedure.**
- **Adequately ventilate the working area when starting the engine in Step 13).**

Before draining engine oil, check engine for oil leakage. If any evidence of leakage is found, correct defective part before proceeding to the following procedure.

1) Remove oil filler cap and oil level gauge from engine.
2) Hoist vehicle.
3) Drain engine oil by removing drain plug (1).
4) Remove drain plug gasket.
5) Wipe drain plug and its mounting surface.
6) Reinstall drain plug with new gasket and tighten drain plug to specified torque.

Tightening torque
Engine oil drain plug (a): 35 N·m (3.6 kgf-m, 26.0 lbf-ft)

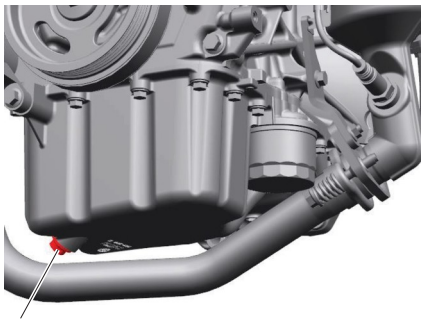

IN0M0A150002-02

7) Loosen oil filter using special tool and remove oil filter.

Special tool
(A): 09915M47341

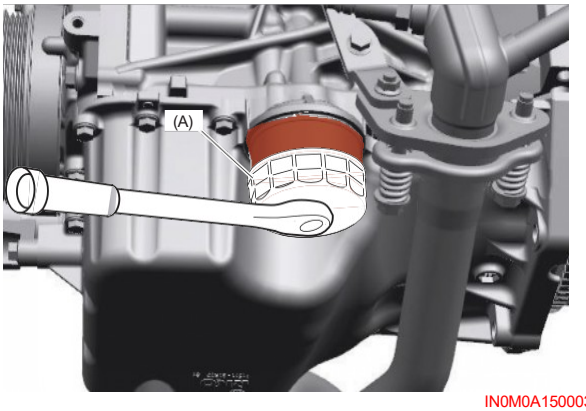

IN0M0A150003-01

8) Wipe oil filter mounting surface of oil pan clean.
9) Apply engine oil to new oil filter gasket.

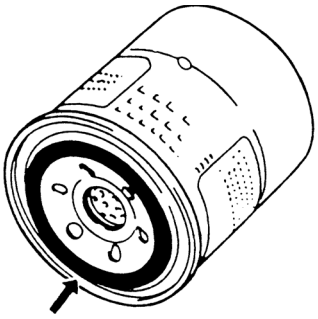

IYSQ01020009-01

10) Install the oil filter according to the following procedure.

Using a torque wrench

a) Fit the oil filter (1) to the oil pan, and then tighten it to the specified torque using the special tool.

Special tool
(A) : 09915M47341

Tightening torque
Oil filter (a): 14 N·m (1.4 kgf-m, 10.5 lbf-ft)

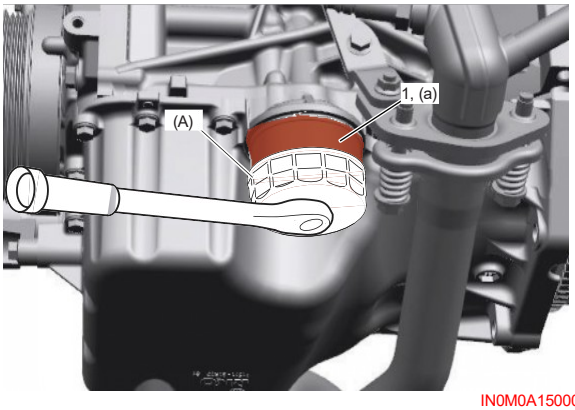

IN0M0A150004-01

Not using a torque wrench

a) Tighten the oil filter (1) by hand until its gasket touches the oil pan.

b) Using the special tool, rotate the oil filter three-quarter turn (2) to tighten it.

Special tool
(A) : 09915M47341

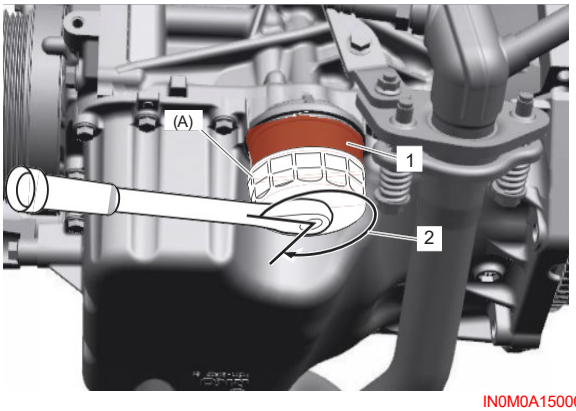

IN0M0A150005-02

11) Add oil up to FULL level mark (hole) on oil level gauge (oil pan and oil filter capacity).
It is recommended to use engine oil quality classified as below
API: SL, SM, SN or SP grade.
ILSAC: GF-6
Select an appropriate SAE oil viscosity according to the chart [A].
0W-16 oil is the best choice for good fuel economy and good starting in cold weather.

NOTE

- **Engine oil capacity is as specified below. However, note that actual amount of oil required during oil change may somewhat differ from that indicated below depending on such factors as temperature, viscosity, etc.**
- **Engine oil specification and viscosity chart [A] indicated in this manual are typical ones. For the specific information on the engine oil and proper engine oil viscosity, refer to "Engine Oil and Filter" section of the Owner's Manual.**

Engine oil specifications
Oil pan capacity: About 2.6 liters (5.49 US pt. / 4.58 Imp pt.)
Oil filter capacity: About 0.2 liters (0.42 US pt. / 0.35 Imp pt.)
Others: About 0.2 liters (0.42 US pt. / 0.35 Imp pt.) Total: About 3.0 liters (6.34 US pt. / 5.28 Imp pt.)

Proper engine oil viscosity chart

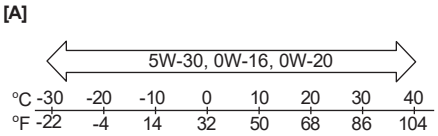

IMNC0A150006-01

12) Install oil filler cap and oil level gauge to engine.

13) Start engine and run it for 3 minutes. Stop it and wait for 5 minutes before checking oil level. Add oil, if necessary, to bring oil level to FULL level mark (hole)
(1) on oil level gauge.

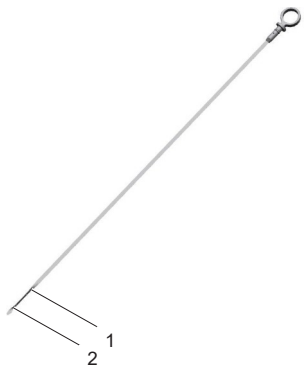

IN0M0A150009-01

2. LOW level mark (hole)

14) Check oil filter and drain plug for oil leakage.

Oil Pressure Switch On-Vehicle Inspection

AENS0M0A1506002 (08(03)

1) Disconnect oil pressure switch connector.
2) Check for continuity between oil pressure switch terminal (1) and timing chain cover (2) as shown. If check result is not as specified, replace oil pressure switch (3).

Oil pressure switch specification
During engine running: No continuity
At engine stop: Continuity exists

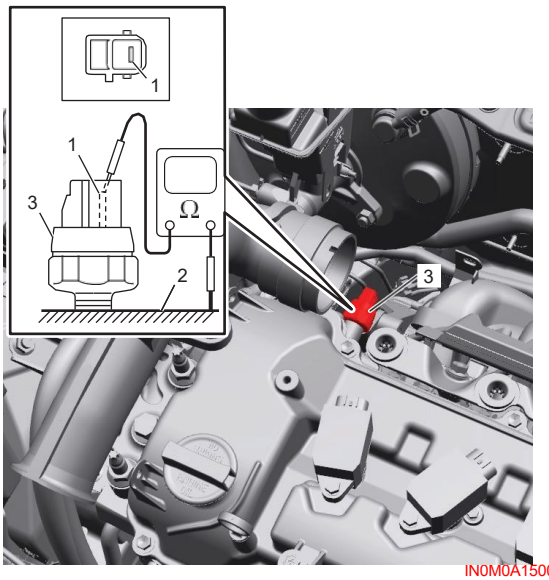

IN0M0A150006-01

Oil Pressure Switch Removal and Installation

AENS0M0A1506003 (08(01)

Reference: “Oil Pressure Switch On-Vehicle Inspection”

Removal

1) Set ignition “OFF”.
2) Disconnect oil pressure switch connector.
3) Remove oil pressure switch (1) from timing chain cover.

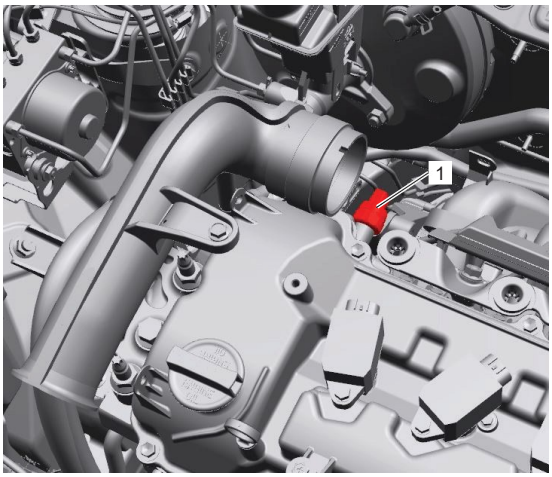

IN0M0A150007-01

Installation

1) Apply sealant to thread portion of oil pressure switch (1), and then tighten it to specified torque.

NOTICE

Excessive sealant may clog the oil pressure switch hole and cause malfunction of the switch.
Apply sealant suitably avoiding the oil pressure switch hole.

“A”: Thread lock cement 99000–32150 (Thread Lock Cement Super 1322)

Tightening torque
Oil pressure switch (a): 13 N·m (1.3 kgf-m, 9.5 lbf-ft)

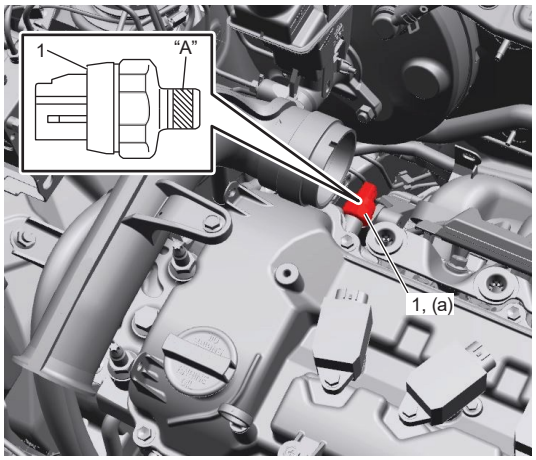

IN0M0A150008-01

2) Connect oil pressure switch connector.
3) Start engine and check oil pressure switch for oil leakage.

Oil Pan and Oil Pump Strainer Components

AENS0M0A1506004 (12(01)

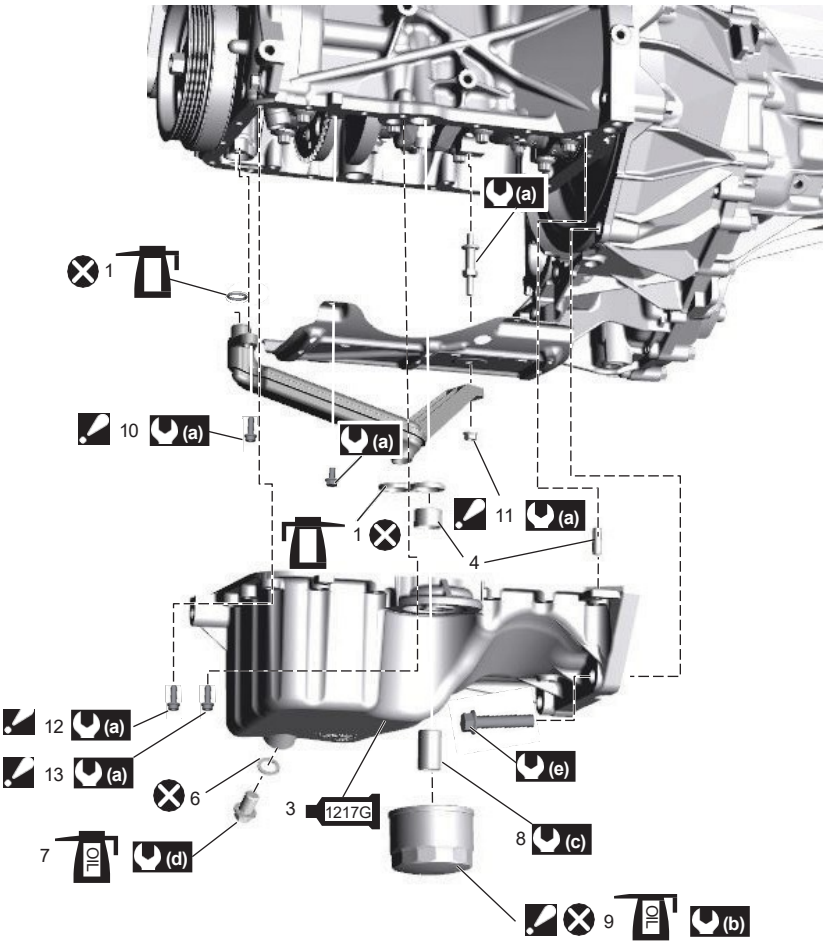

IMNC0A150010-01

OIL 1. O-ring : Apply engine oil.	8. Oil filter stand	(b) : 14 N·m (1.4 kgf-m, 10.5 lbf-ft)
2. Strainer	OIL 9. Oil filter : For tightening order, refer to "Engine Oil and Filter Change". : Apply engine oil to oil filter gasket.	(c) : 17.5 N·m (1.8 kgf-m, 12.9 lbf-ft)
1217G 3. Oil pan : Apply sealant 99000-31260 to mating surface.	10. Oil pump strainer bolt : For tightening order, refer to "Oil Pan and Oil Pump Strainer Removal and Installation".	(d) : 35 N·m (3.6 kgf-m, 26.0 lbf-ft)
4. Dowel pin	11. Oil pump strainer bracket nut : For tightening order, refer to "Oil Pan and Oil Pump Strainer Removal and Installation".	(e) : 55 N·m (5.6 kgf-m, 40.5 lbf-ft)
5. Oil pan baffle plate	12. Oil pan bolt No.1 : For tightening order, refer to "Oil Pan and Oil Pump Strainer Removal and Installation".	: Do not reuse.
6. Gasket	13. Oil pan bolt No.2 : For tightening order, refer to "Oil Pan and Oil Pump Strainer Removal and Installation".	
OIL 7. Drain plug : Apply engine oil to mating surface.	(a) : 11 N·m (1.1 kgf-m, 8.5 lbf-ft)	

Oil Pan and Oil Pump Strainer Removal and Installation

AENS0M0A1506005 (08(01)

Reference: "Oil Pan and Oil Pump Strainer Components"

Removal

1) Remove oil level gauge.
2) Hoist vehicle.
3) Drain engine oil. (Engine Oil and Filter Change)
4) Remove exhaust center pipe. (Exhaust Pipe and Muffler Removal and Installation) in Section 1K
5) With hoses connected, detach A/C compressor from cylinder block and oil pan. (Compressor Assembly Removal and Installation) in Section 7B

NOTICE

When A/C compressor is detached, the A/C hoses could be damaged receiving weight of the compressor.
Suspend the removed A/C compressor to the vehicle body while the compressor is detached.

6) Remove oil filter. (Engine Oil and Filter Change)
7) Remove transaxle bolts (1).
8) Remove oil pan bolts (2).

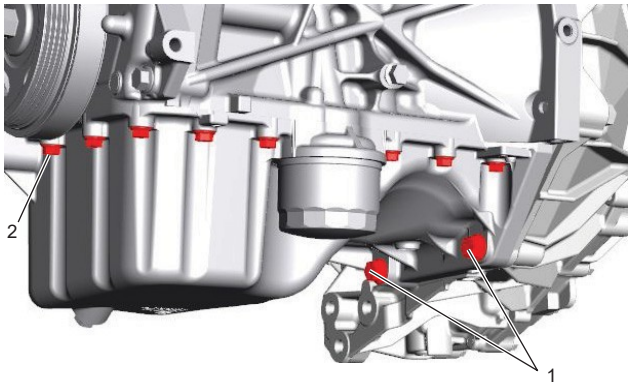

IMNC0A150011-01

9) Using a large flat-bladed screwdriver (heavy duty type) or the like, open oil pan gradually and carefully from the lug portions and remove it from cylinder block.
10) Remove oil pump strainer (1) with O-ring (2) from cylinder block, if necessary.
11) Remove oil pan baffle plate (3) from cylinder block, if necessary.
12) Remove stud bolt (4) from cylinder block, if necessary.

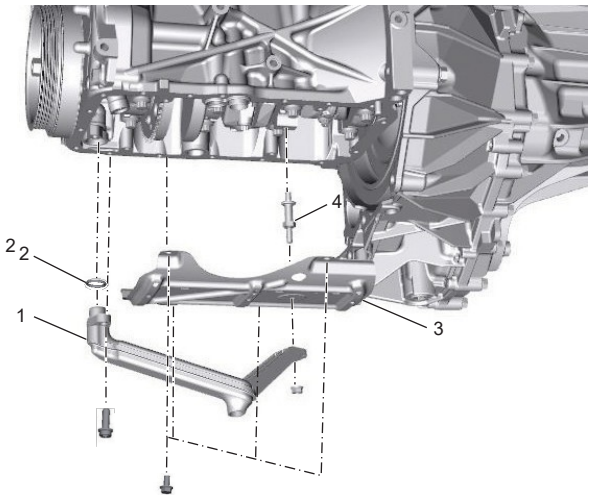

IMNC0A150012-01

13) Remove oil filter stand (1) from oil pan using special tool and wrenches, if necessary.

Special tool
(A): 09915M47350

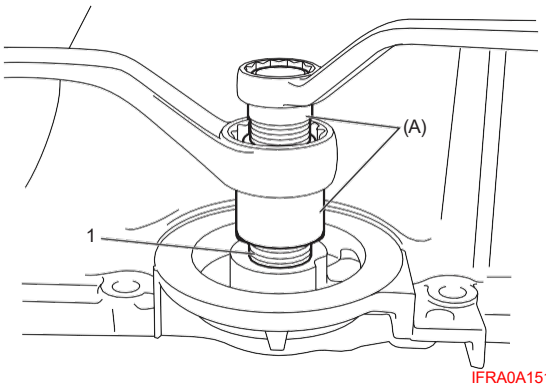

IFRA0A151015-01

Installation

1) Clean sealing surface between oil pan and cylinder block.
   Remove oil, old sealant and dust from sealing surface.
2) Install oil filter stand (1) to oil pan, if removed, and tighten it with special tool to specified torque.

Special tool
(A): 09915M47350

Tightening torque
Oil filter stand (a): 17.5 N·m (1.8 kgf-m, 12.9 lbf-ft)

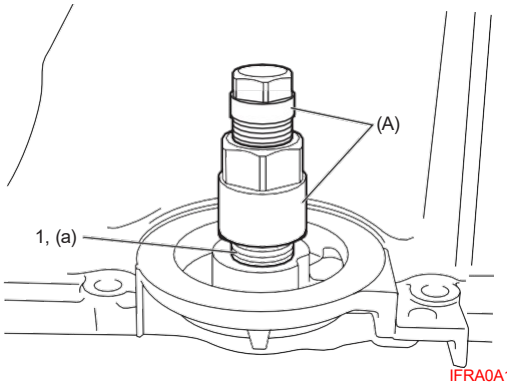

IFRA0A151016-01

3) Install oil pan baffle plate stud bolt (1), if removed and then tighten oil pan baffle plate stud bolt to specified torque.

Tightening torque
Oil pan baffle plate stud bolt (a): 11 N·m (1.1 kgf-m, 8.5 lbf-ft)

4) Install oil pan baffle plate (2) and then tighten oil pan baffle plate bolts (3) to specified torque.

Tightening torque
Oil pan baffle plate bolt (b): 11 N·m (1.1 kgf-m, 8.5 lbf-ft)

5) Apply engine oil to new O-ring (4) and then install O-ring to oil pump strainer (5).
6) Install oil pump strainer with O-ring to oil pump and then tighten bolt (6) first and nut (7) to specified torque.

Tightening torque
Oil pump strainer bolt (c): 11 N·m (1.1 kgf-m, 8.5 lbf-ft)
Oil pump strainer bracket nut (d): 11 N·m (1.1 kgf-m, 8.5 lbf-ft)

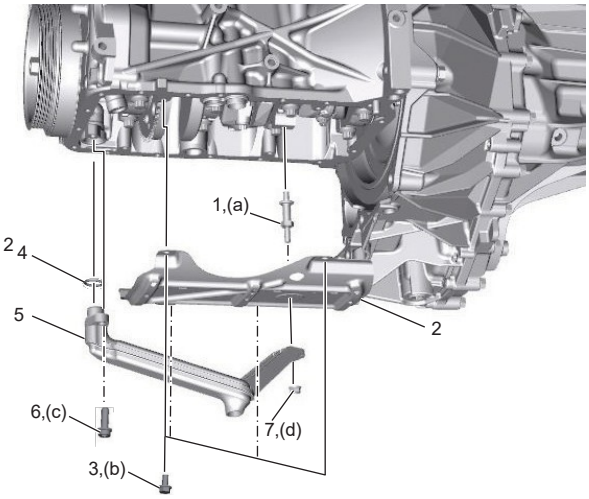

IMNC0A150013-01

7) Install dowel pins (1) to oil pan and cylinder block.
8) Clean mating surfaces of oil pan and cylinder block.
9) Apply engine oil to new O-ring (2) and then install O-ring to the position as shown in figure.

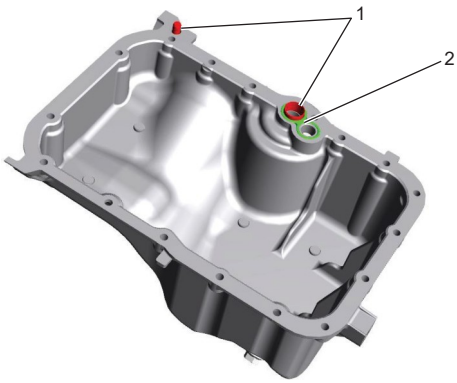

IMNC0A150014-01

10) Apply sealant to oil pan mating surface as shown in figure.

"A": Sealant 99000–31260 (SUZUKI Bond No.1217G)

Sealant amount for oil pan
Width: "a": 3 mm (0.12 in.)
Height "b": 2 mm (0.08 in.)

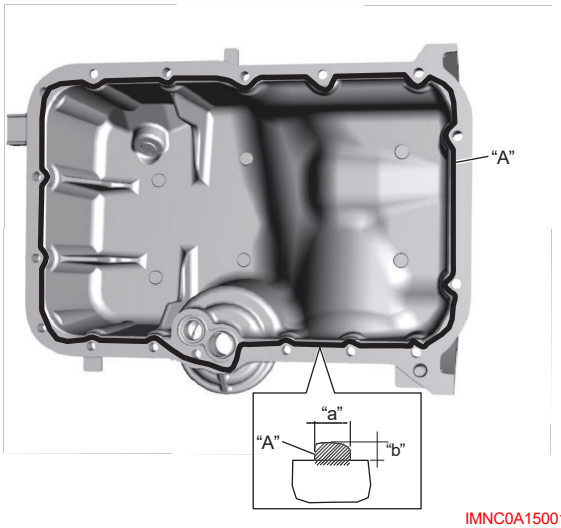

IMNC0A150015-01

11) Within 2 minutes after applying sealant, install oil pan to cylinder block and then tighten oil pan bolts No.1
(1) and oil pan bolt No.2 (2) in numerical order ("1" – "17") evenly and gradually to specified torque.

Tightening torque
Oil pan bolt No.1 (a): 11 N·m (1.1 kgf-m, 8.5 lbf-ft)
Oil pan bolt No.2 (b): 11 N·m (1.1 kgf-m, 8.5 lbf-ft)

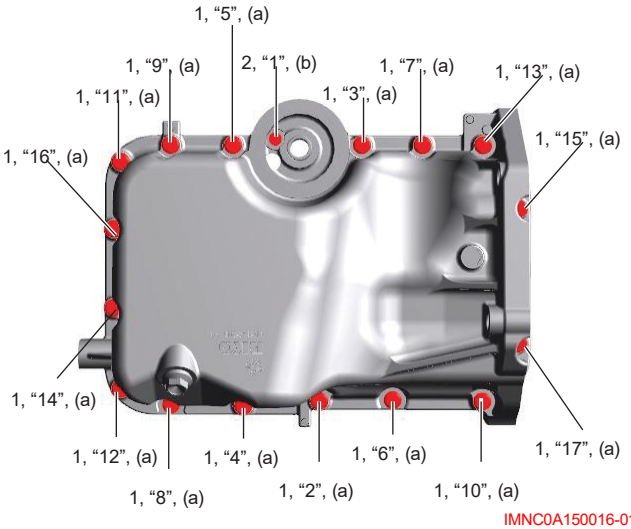

IMNC0A150016-01

12) Tighten transaxle bolts (1) to specified torque.

Tightening torque
Transaxle bolt (a): 55 N·m (5.6 kgf-m, 40.5 lbf-ft)

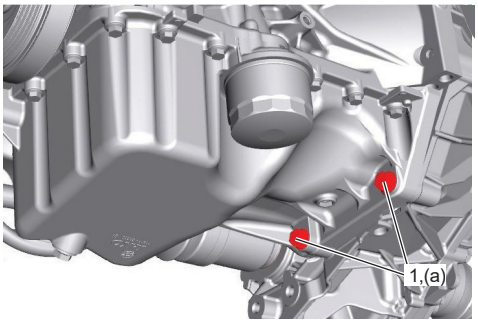

IMNC0A150017-01

13) Install oil filter. (Engine Oil and Filter Change)
14) Install A/C compressor to cylinder block and oil pan. (Compressor Assembly Removal and Installation) in Section 7B
15) Install exhaust center pipe. (Exhaust Pipe and Muffler Removal and Installation) in Section 1K
16) Install drain plug and then refill engine with engine oil. (Engine Oil and Filter Change)
17) Install oil level gauge.
18) Check that there is no engine oil leakage and exhaust gas leakage.

Oil Pump Assembly Components

AENS0M0A1506006 (12(01)

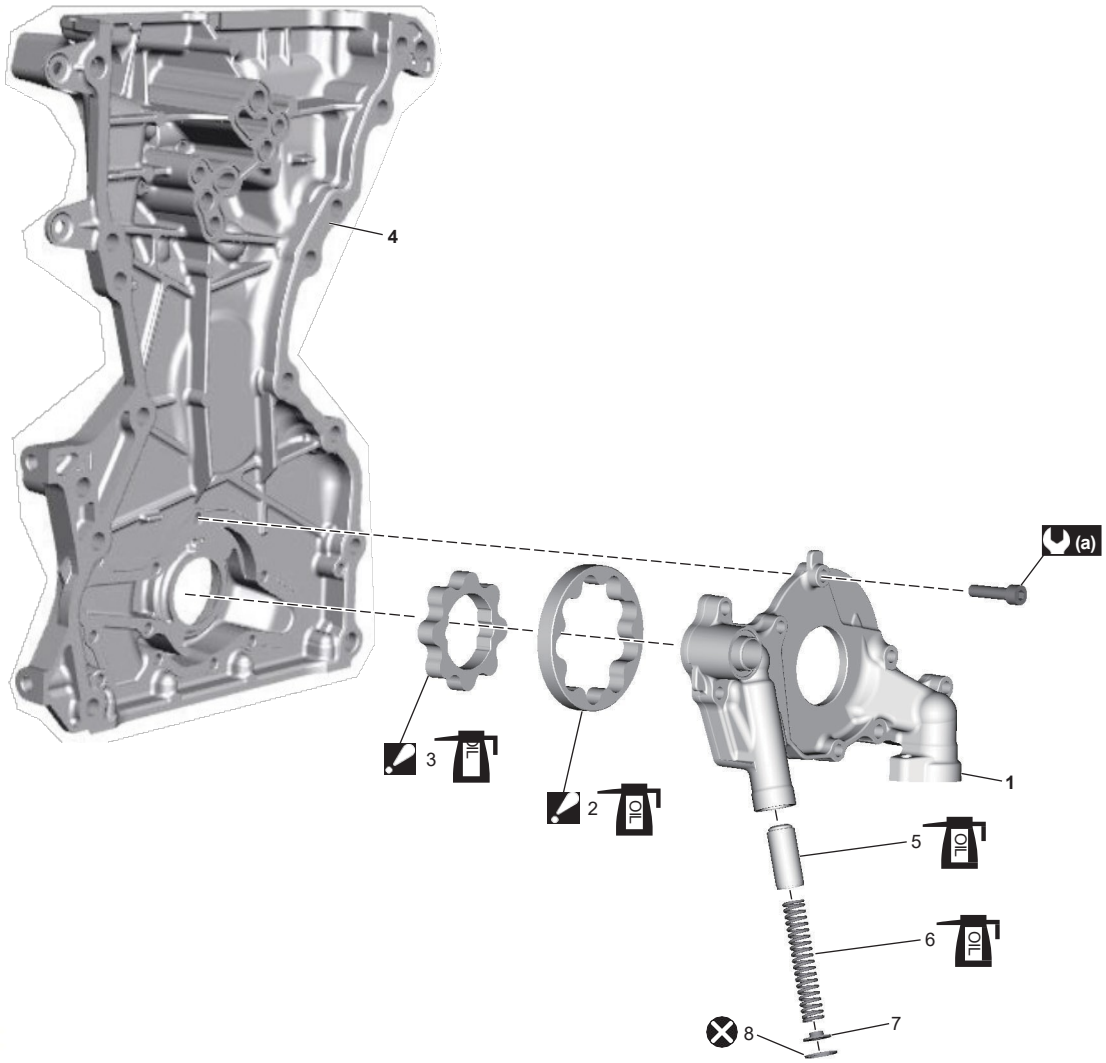

IMNC0A150018-01

1. Rotor plate	5. Relief valve : Apply engine oil to sliding surface.	(a) : 11 N·m (1.1 kgf-m 8.5 lbf-ft)
2. Outer rotor : For installation, refer to "Oil Pump Assembly Disassembly and Reassembly". : Apply engine oil to sliding surface.	6. Relief valve spring : Apply engine oil to sliding surface.	: Do not reuse.
3. Inner rotor : For installation, refer to "Oil Pump Assembly Disassembly and Reassembly". : Apply engine oil to sliding surface.	7. Retainer	
4. Timing chain cover	8. Circlip	

Oil Pump Assembly Removal and Installation

AENS0M0A1506007 (08(01)

Reference: "Oil Pump Assembly Components"

Oil pump is incorporated in timing chain cover.

For removal and installation, refer to (Timing Chain Cover Removal and Installation) in Section 1D.

Oil Pump Assembly Disassembly and Reassembly

AENS0M0A1506008 (08(02)

Reference: “Oil Pump Assembly Components”

Reference: “Oil Pump Assembly Removal and Installation”

Disassembly

1) Remove rotor plate (1) by removing its mounting bolts (2).

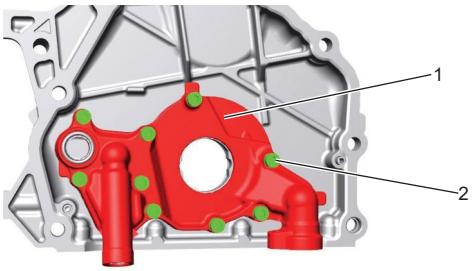

IMNC0A150019-01

2) Remove outer rotor (1) and inner rotor (2).

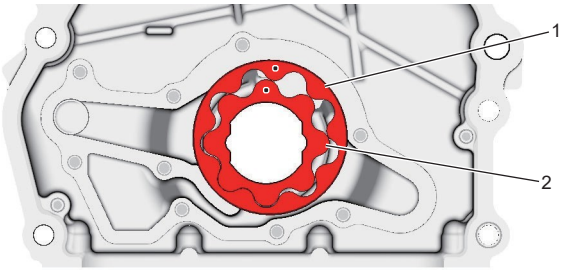

IMNC0A150022-02

3) Remove relief valve (1), relief valve spring (2) and retainer (3) by removing circlip (4).

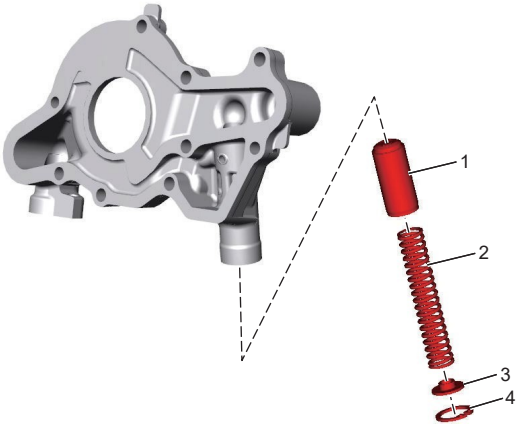

IMNC0A150020-02

Reassembly

Reference: “Oil Pump Inspection”

1) Clean and then dry all disassembled parts.
2) Apply thin coat of engine oil to inner and outer rotors, oil seal lip portion, inside surfaces of timing chain cover and plate.
3) Facing each front mark (3) toward cylinder block, install outer rotor (1) and inner rotor (2) to timing chain cover.

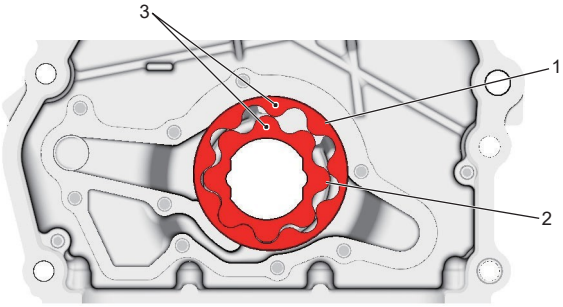

IFKA0P150025-01

4) Apply engine oil to relief valve (1) and relief valve spring (2), and install them with retainer (3) and new circlip (4) to rotor plate (5).

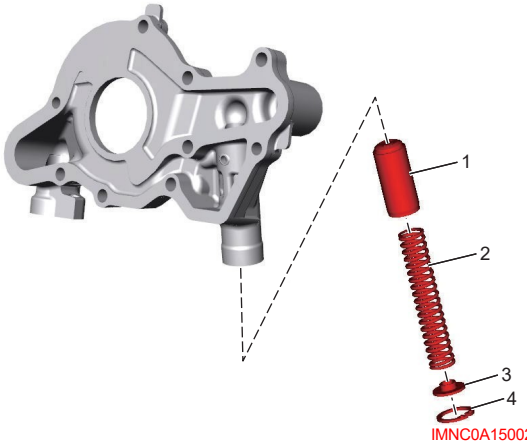

IMNC0A150020-02

5) Install rotor plate (1) and tighten all bolts to specified torque. After installing plate, check that rotors turn smoothly by hand.

Tightening torque
Oil pump rotor plate bolt (a): 11 N·m (1.1 kgf-m, 8.5 lbf-ft)

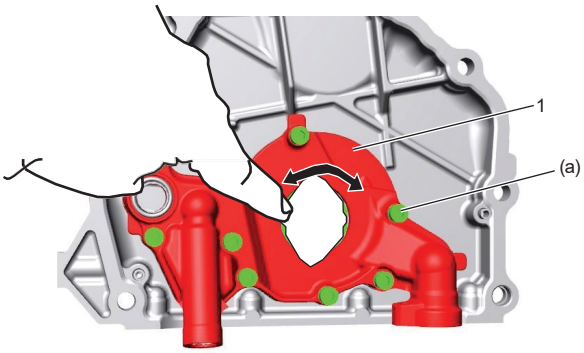

IMNC0A150021-01

Oil Pump Inspection

AENS0M0A1506009 (08(03)

Reference: “Oil Pump Assembly Disassembly and Reassembly”

Oil Seal

Check oil seal lip for defects and damage. Replace it if necessary.

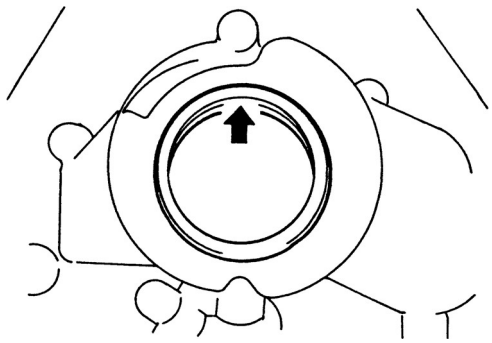

I2RH0B150023-01

Oil Pump

- Check outer rotor (1), inner rotor (2), rotor plate and timing chain cover for excessive wear or damage.

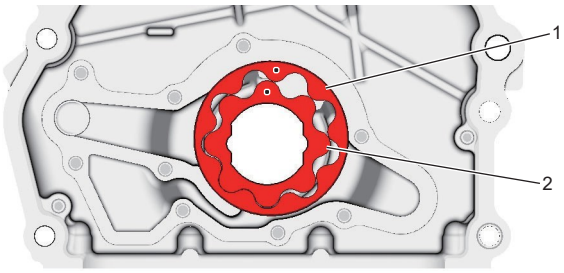

IMNC0A150022-02

- Check that relief valve (1) is not excessively worn or damaged and operates smoothly.

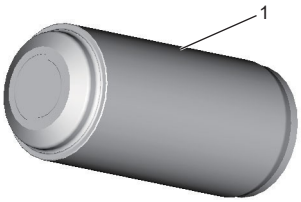

IFKA0P150027-01

Radial clearance

Check radial clearance between outer rotor (1) and timing chain cover (2) using feeler gauge.
If clearance is out of specification, replace rotor set or oil pump assembly.

Radial clearance between outer rotor and case of oil pump
Standard: 0.135 – 0.205 mm (0.0053 – 0.0080 in.)
Limit: 0.225 mm (0.0088 in.)

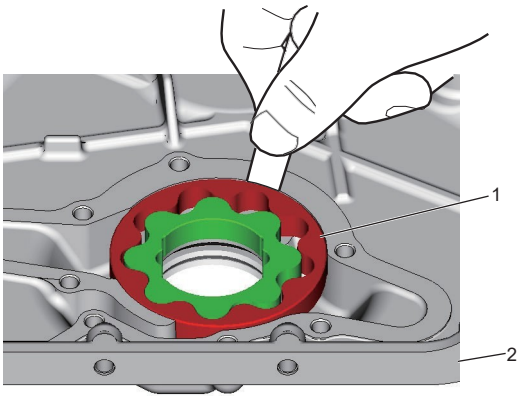

IFRA0B152012-01

Side clearance

Using straightedge (2) and feeler gauge (1), measure side clearance.
If side clearance is out of specification, replace oil pump assembly.

Side clearance for oil pump inner rotor
Standard: 0.038 – 0.083 mm (0.0015 – 0.0032 in.)
Limit: 0.10 mm (0.0039 in.)

Side clearance for oil pump outer rotor
Standard: 0.038 – 0.083 mm (0.0015 – 0.0032 in.)
Limit: 0.10 mm (0.0039 in.)

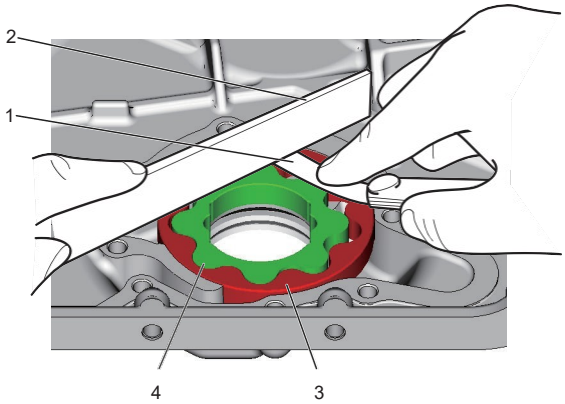

IFKA0P150029-01

3. Outer rotor	4. Inner rotor

Relief valve spring free length and load

Check free length and load of relief valve spring as shown in figure. If any of measurement is smaller than specification, replace relief valve spring.

Relief valve spring free length and load

	Standard	Limit
Free length	59.7 mm (2.35 in.)	—
Load at spring length 52.0 mm (2.05 in.)	21.5 – 24.7 N (2.2 – 2.5 kgf, 4.8 – 5.6 lbf)	20.0 N (2.0 kgf, 4.5 lbf)

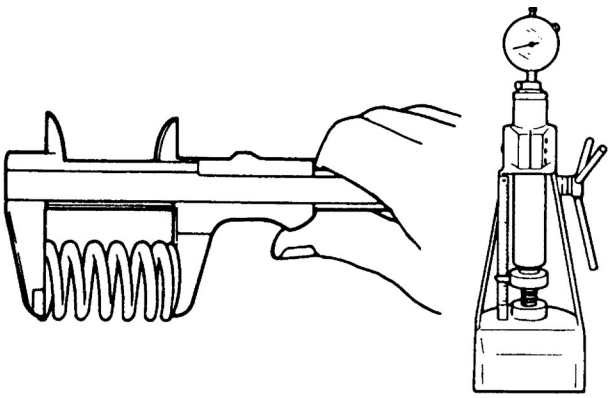

I2RH01150023-01

Specifications

Tightening Torque Specifications

AENS0M0A1507001 (09(t)

Fastening part	Tightening torque			Note
	N·m	kgf-m	lbf-ft	
Engine oil drain plug	35	3.6	26.0	(T1E001)
Oil filter	14	1.4	10.5	(T1E002)
Oil pressure switch	13	1.3	9.5	(T1E003)
Oil filter stand	17.5	1.8	12.9	(T1E004)
Oil pan baffle plate stud bolt	11	1.1	8.5	(T1E005)
Oil pan baffle plate bolt	11	1.1	8.5	(T1E006)
Oil pump strainer bolt	11	1.1	8.5	(T1E007)
Oil pump strainer bracket nut	11	1.1	8.5	(T1E008)
Oil pan bolt No.1	11	1.1	8.5	(T1E009)
Oil pan bolt No.2	11	1.1	8.5	(T1E010)
Transaxle bolt	55	5.6	40.5	(T1E011)
Oil pump rotor plate bolt	11	1.1	8.5	(T1E012)

Reference:

For the tightening torques of fasteners not specified in this page, refer to:

"Oil Pan and Oil Pump Strainer Components"
"Oil Pump Assembly Components"
"Fasteners Information" in Section 0A

Special Tools and Equipment

Recommended Service Material

AENS0M0A1508001 (11(m)

Material	SUZUKI recommended product or Specification		Note
Sealant	SUZUKI Bond No.1217G	P/No.: 99000–31260	(M1E002)
Thread lock cement	Thread Lock Cement Super 1322	P/No.: 99000–32150	(M1E001)

NOTE

Required service material(s) is also described in:
"Oil Pan and Oil Pump Strainer Components"
"Oil Pump Assembly Components"

Special Tool

AENS0M0A1508002 (11(s)

09915M47341 Oil filter wrench socket (L1E003) / (L1E004) / (L1E005) 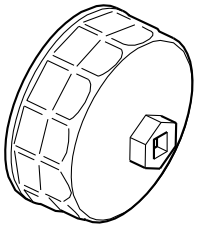	09915M47350 Oil filter stand remover (L1E006) / (L1E007) 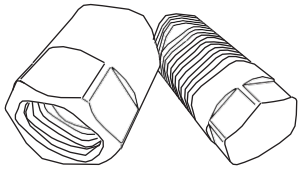
09915M77311 Oil pressure gauge (L1E001) 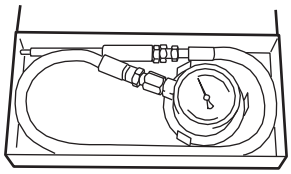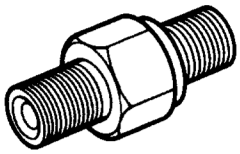	09915M78211 Oil pressure gauge attachment (L1E002)